Environmental Science & Technology

Article

pubs.acs.org/est

Thermodynamic Analysis of Osmotic Energy Recovery at a Reverse Osmosis Desalination Plant

Benjamin J. Feinberg, Guy Z. Ramon,[†] and Eric M. V. Hoek*

Department of Civil & Environmental Engineering and California NanoSystems Institute, University of California, Los Angeles, California, 90095, United States

ABSTRACT: Recent years have seen a substantial reduction of the specific energy consumption (SEC) in seawater reverse osmosis (RO) desalination due to improvements made in hydraulic energy recovery (HER) as well as RO membranes and related process technologies. Theoretically, significant potential for further reduction in energy consumption may lie in harvesting the high chemical potential contained in RO concentrate using salinity gradient power technologies. Herein, "osmotic energy recovery" (OER) is evaluated in a seawater RO plant that includes state-of-the-art RO membranes, plant designs, operating conditions, and HER technology. Here we assume the use of treated wastewater effluent as the OER dilute feed, which may not be available in suitable quality or quantity to allow operation of the coupled process. A two-stage OER configuration could reduce the SEC of seawater RO plants to well below the theoretical minimum work of separation for state-of-the-art RO-HER configurations with a breakeven OER CAPEX equivalent to 42% of typical RO-HER plant cost suggesting significant cost savings may also be realized. At present, there is no commercially viable OER technology; hence, the feasibility of using OER at seawater RO plants remains speculative, however attractive.

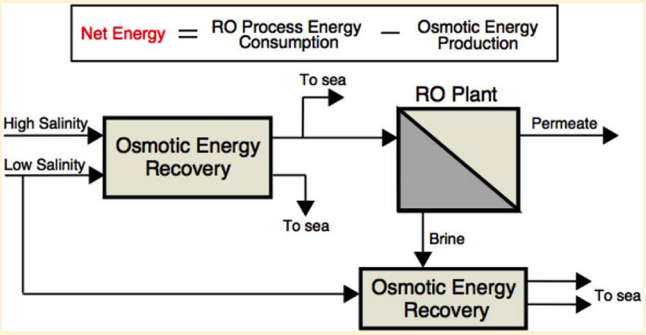

1. INTRODUCTION

Reverse osmosis (RO) technology now dominates the global market for seawater desalination, primarily due to its significantly lower energy consumption compared with thermal technologies. The advance of RO technology is due to improvements in membrane materials, modules, process components, and process designs, which have resulted in significant reductions of the specific energy consumption (SEC) and cost of water produced. Notably, SEC has been nearly halved due to high-efficiency hydraulic energy recovery (HER) devices, which transfer hydraulic energy from the (still) high-pressure brine stream, prior to its discharge, to the low-pressure incoming feed stream. Including pretreatment, state of the art installations now operate with a SEC on the order of 2.5 kWh/m^3.[1] From elementary thermodynamics it may be calculated that the minimum energy required to extract 1 m^3 of freshwater at 50% recovery (i.e., from 2 m^3 of seawater) is ~1.1 kWh, which implies that a substantial gap still exists between theory and practice. Certainly, some gap must always exist due to intrinsic irreversibilities and losses; however, the energy demand of RO still accounts for 40−50% of the cost of water in seawater desalination,[2] clearly suggesting that a breakthrough reduction in the energy demand must be sought in order to transform desalination into a more cost-effective, sustainable source of fresh water.

One such possibility is the partial recovery of the chemical potential of the concentrated brine—the very same energy spent separating water out of the feed solution—employing an osmotic energy recovery process. Osmotic energy recovery (OER) involves harvesting the energy released during the controlled mixing of two solutions with different salt concentrations (i.e., a salinity gradient). Different techniques exist for the recovery of energy from the mixing of varied salinity flows. These technologies include reverse electrodialysis (RED),[3−5] pressure retarded osmosis (PRO),[6,7] capacitive mixing,[8,9] and mixing in ion selective nanochannels.[10] Recently, a microbially assisted RED process has been developed that simultaneously treats wastewater, produces desalinated water, and generates electricity.[11,12]

A comparison of the power potential for the two most prominent, membrane-based salinity gradient technologies, PRO and RED, was recently published, in which the various technological challenges were outlined, and the most promising avenues for improvement were identified.[13] Briefly, PRO and RED are theoretically reversed versions of the RO and ED desalination techniques, respectively. In PRO, water molecules diffuse across a semipermeable membrane from a high chemical potential (dilute) feed into a pressurized, low chemical potential (concentrated) feed. The volume-augmented, concentrated feed is then passed through a hydro-turbine, generating electricity. In RED, ion selective membranes separate alternating concentrated and dilute feed compartments. The concentration difference between the feeds drives

Received: October 16, 2012
Revised: January 15, 2013
Accepted: January 18, 2013
Published: January 18, 2013

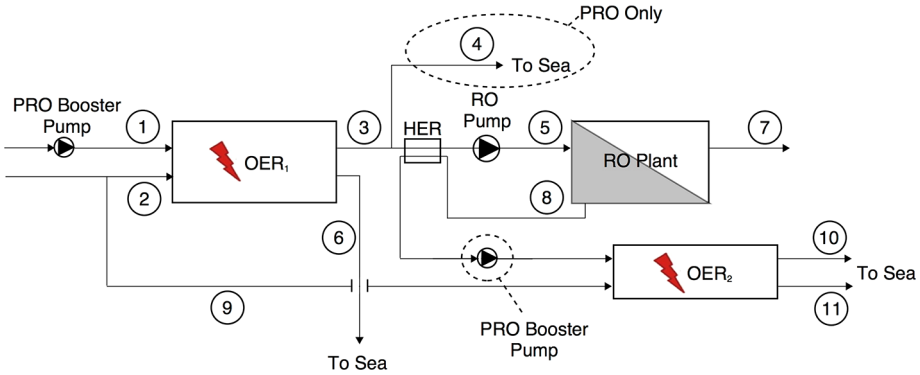

Figure 1. Schematic representation of the coupled process. Numerical designations correlate to volumes and concentrations in Table 1.

the diffusion of anions against the electric field, creating an ionic flux that is converted into an electron flux at the electrodes. Despite the fact that power densities from these salinity gradient energy processes still remain relatively low, improvements in power densities have been forecast in the literature.[13,14]

The use of seawater RO brine in an RED process has been previously suggested in the patent literature;[15] however, energy recovery from the RO feed was not considered. Recently, the use of forward osmosis, a membrane based process proposed for desalination, has been suggested in the literature in a coupled RO process arrangement.[16,17] This "osmotic dilution" reduces the energy demand of RO and, although the use of a salinity gradient energy technology is briefly discussed, the authors do not present a quantitative analysis of the energy saving potential of osmotic energy recovery. During the revision process for this publication, it has come to our attention that an insightful study of an RO-RED coupled process has been recently published.[18] Although the authors do not comprehensively study the thermodynamics of mixing (or the use of PRO as a mixing technology), their conclusions show that a coupled RO-RED process could reduce the net SEC of seawater RO to below zero kilowatt-hours per cubic meter of RO permeate.

In this study, we assess the possibility of osmotic energy recovery from both the RO feed stream *and* the RO brine. A straightforward thermodynamic analysis is used to evaluate the potential of PRO and RED processes coupled to a typical seawater RO plant. Here we provide insight into the way various process parameters affect the optimal SEC for a hybrid RO-HER-OER plant configuration. It is our intent to theoretically probe the process potential through the thermodynamically available work produced by each OER technology. Hence, system-specific losses, for example, hydraulic losses (pumps, piping, modules etc.), membrane losses and other sources of inefficiency are ignored. This is based on our contention that, prior to resolving such details, it is desirable to first establish the motivation for process implementation.

2. THEORY

2.1. Process Description. Several potential configurations may be envisioned for integrating osmotic energy recovery with RO desalination, perhaps the most obvious one being remixing the concentrated brine with seawater. However, the complete mixing of equal volumes of seawater and RO-brine (at 50% recovery) would theoretically yield ~0.12 kWh/m^3. A significantly greater impact is envisioned when a low-salinity water source is present such as fresh surface water, tertiary wastewater or RO concentrate from a wastewater reuse plant or other mildly brackish natural or industrial waters. The potential for mixing with treated wastewaters of different origins will vary on a site-by-site basis; however, coordinated site planning could allow for colocation of wastewater treatment or reuse plants with seawater RO facilities. In such a case, it would generally be possible to employ OER technology on the RO feed side and the brine outflow, mixing the low-salinity wastewater either with incoming seawater or the brine, prior to discharge. The greatest potential energy is obviously contained in the brine-wastewater pair; however, mixing the seawater-wastewater pair prior to RO has merit beyond the energy of mixing, as it also significantly reduces the salinity of the RO feed, translating into further reduction of energy consumption. Hence, the RO-OER process considered in the forthcoming analysis employs two stages of osmotic energy recovery coupled with a HER-equipped seawater RO process (Figure 1 and Table 1). The coupled process includes both pre-RO, OER mixing (OER_1) and post-RO, OER mixing (OER_2).

For the sake of comparison, the straightforward dilution of the seawater inflow through direct mixing with low-salinity sources was also considered as a means by which the energy demand of RO may be lowered.[16] The direct dilution method, while probably cheaper than OER, will provide fewer barriers to

Table 1. Flow Volumes and Concentrations at Each Point in the Coupled Process (see Figure 1 for Accompanying Graphical Representation)

designation	flow type	volume	concentration
1	seawater	$V_{c,i,OER1}$	$c_{c,i,OER1}$
2	treated wastewater	$V_{d,i,OER1} = V_{c,i,OER1}/\phi$	$c_{d,i,OER1}$
3	diluted seawater	$V_{c,f,OER1}$	$c_{c,f,OER1}$
4[a]	diluted seawater	$V_{c,f,OER1} - V_{c,i,OER1}$	$c_{c,f,OER1}$
5	diluted seawater	$V_f = V_{c,i,OER1}$	$c_f = c_{c,f,OER1}$
6	concentrated treated wastewater	$V_{d,f,OER1}$	$c_{d,f,OER1}$
7	RO permeate	$V_p = V_{c,i,OER1}Y$	c_p
8	RO brine	$V_{c,i,OER2} = V_b = V_{c,i,OER1}(1 - Y)$	$c_b = c_{c,i,OER2}$
9	treated wastewater	$V_{d,i,OER2} = V_{c,i,OER2}/\phi$	$c_{d,i,OER2} = c_{d,i,OER1}$
10	Diluted RO brine	$V_{c,f,OER2}$	$c_{c,f,OER2}$
11	concentrated treated wastewater	$V_{d,f,OER2}$	$c_{d,f,OER2}$

[a]PRO Only.

the transport of emerging contaminants into the RO permeate, an important consideration for drinking water production from seawater; however, not all seawater RO plants are designed to produce potable water. Regardless, any OER device should have a good capacity to keep such cross-contamination to a minimum to ensure the seawater RO product remains of appropriate quality. In the case of membrane-based OER, rejection of both pesticides and pharmaceutical compounds was found to exceed 95% in polyamide-based, thin film composite RO membranes, materials which seem likely to find use in PRO.[19] Similarly, ion exchange membranes, used in RED, can be finely tuned for the separation or concentration of a variety of pharmaceuticals and organic compounds.[20] It is unclear as to what degree of cross-contamination would be expected when employing other, emerging, salinity-gradient energy devices.

As already mentioned above, we are interested in the maximum energy recoverable through each of these mixing methods. Therefore, we do not consider membrane or module related inefficiencies, hydraulic losses in pumps/turbine/pipeworks or the possible energy demands of pretreatment. For consistency, the volume passed to the RO process is kept constant regardless of the OER technology chosen (PRO inherently involves significant volumetric exchanges while in RED this is negligible). This results in the discharging of excess flow from the PRO process before transfer to the RO system. In a practically applied coupled process it is likely that the PRO plant would be sized so that the PRO outflow would directly meet the RO feed supply requirement. This would reduce the capital investiture for the PRO plant but would result in less overall energy savings due to reduced flow rate (and thus recovered energy) through the PRO plant.

2.2. The Free Energy of Mixing. The energy released during the mixing of two solutions with different molecular compositions was calculated through a method similar to that described by Yip et al.,[21] although having been modified using simple algebra, the equation appears here in slightly different form. Operational and engineering constraints would prevent any OER process from achieving full mixing, and it is therefore useful to evaluate the energy recovery when the outlet feeds are not at thermodynamic equilibrium. The model described herein accounts for scenarios where mixing is less than 100%, whereby the summation of the Gibbs free energy of the two solutions before and after ideal mixing (i.e., isothermal conditions and activity coefficients set at unity) results in[21]

$$\Delta G = -2RT[V_{c,f}c_{c,f}\ln c_{c,f} + V_{d,f}c_{d,f}\ln c_{d,f} - V_{c,i}c_{c,i}\ln c_{c,i} - V_{d,i}c_{d,i}\ln c_{d,i}] \quad (1)$$

where R is the universal gas constant, T is temperature, V is volume, c is concentration, the subscripts i and f denote before (initial) and after (final) mixing, respectively, and the subscripts c and d refer to the concentrated and dilute solution feeds, respectively.

2.2.1. Mixing by PRO. The reversible work that can be recovered by PRO may be calculated using either the free energy of mixing, eq 1, or through the thermodynamic relationship, $W = \int P\mathrm{d}V$, where P is pressure and V is volume. The osmotic pressure (i.e. the pressure required to inhibit osmotic diffusion) of the concentrated and dilute feeds, π_c and π_d, respectively, can be calculated through the linear approximation $\pi = icRT$, where c is the concentration of ions in the given feed and i is the van't Hoff factor. The maximum reversible work is calculated by setting the external pressure to the internal pressure within the system, that is, so that the osmotic pressure difference, is set equal to P for for each infinitesimally small change in volume according to

$$W_{\mathrm{rev}}^{\mathrm{PRO}} = \int_0^{\Delta V} \Delta\pi \mathrm{d}V \quad (2)$$

The expression resulting from the integration of eq 2, used in subsequent calculations, equates to

$$W_{\mathrm{rev}}^{\mathrm{PRO}} = 2RT[c_{c,i}V_{c,i}\ln(V_{c,i} + \Delta V) + c_{d,i}V_{d,i}\ln(V_{d,i} - \Delta V)] \quad (3)$$

where ΔV is the total volume of water transferred between the two solutions and the factor of 2 represents the van't Hoff factor for sodium chloride. In contrast to the Gibbs free energy of mixing, the work produced by mixing is represented here as a positive value. Feed volumes and concentrations before and after mixing, for PRO, are listed in Table 2.

Table 2. Feed Volumes and Concentrations before and after Mixing for an OER Process[a]

process	$V_{c,f}$	$V_{d,f}$	$c_{c,f}$	$c_{d,f}$
PRO	$V_{c,i} + \Delta V$	$V_{d,i} - \Delta V$	$n_{c,i}/V_{c,f}$	$n_{d,i}/V_{d,f}$
RED	$V_{c,i}$	$V_{d,i}$	$(n_{c,i} - \Delta n)/ V_{c,f}$	$(n_{d,i} + \Delta n)/ V_{d,f}$

[a]Subscript c indicates the concentrated (seawater) feed, the subscript d indicates the low salinity (treated wastewater) feed, and the subscript i indicates pre-mixing and subscript f indicates post-mixing. The number of moles and the volume of water transferred between the feeds are indicated by Δn and ΔV, respectively.

In PRO, extraction of the energy is facilitated by a hydroturbine, which converts the kinetic energy of the flowing water to electricity. During the mixing process, the transport of water across the membrane terminates when thermodynamic equilibrium is reached, that is, at the point of equal chemical potentials on either side of the membrane. One such equilibrium naturally exists when the osmotic pressure difference is equal to zero, that is, $\Delta\pi = 0$. However, in the currently accepted configuration used for the operation of PRO the incoming high-concentration feed is pressurized prior to the membrane-mediated mixing process. The reasoning behind this configuration is based on efficiency considerations (pump and turbine). However, the pressurization alters the equilibrium point, which now occurs when $\Delta\pi = \Delta P$, the applied pressure, and therefore limits the extractable energy. It is therefore impossible that a real PRO process would be able to extract all of the reversible work. Therefore, the *available* work extractable from this configuration of a PRO process is the volume expansion work performed against the constant applied pressure,

$$W_{\mathrm{av}}^{\mathrm{PRO}} = \Delta P \Delta V \quad (4)$$

This available work will necessarily be considerably lower in magnitude than the reversible work. Realistically, the actual recoverable work is likely to be even lower than this available work due to the hydraulic resistance of the semipermeable membrane, frictional losses through pipework, and hydroturbine and pump inefficiencies. In the present study, however, we ignore the internal system losses and use $W_{\mathrm{av}}^{\mathrm{PRO}}$ and $W_{\mathrm{rev}}^{\mathrm{PRO}}$ as measures of the intrinsic potential for energy savings from a coupled process.

2.2.2. Mixing by RED. The maximum work in a RED process can similarly be calculated either through the free energy of

mixing equation (eq 1) or the cell potential $\Delta G = -nF\Delta E$, where n is the number of ions transferred, F the Faraday constant, and ΔE the zero current cell potential (or electromotive force). The electromotive force can be calculated from the difference of the individual half-cell reaction potentials, E_c and E_d, of the concentrated and dilute solutions, respectively. The half-cell reaction potentials can be calculated through $E = (RT/zF)\ln c$, where c is the concentration of ions in the given feed and z is the valence of the ions. The maximum reversible work for a given extent of mixing may be calculated as

$$W_{\text{rev}}^{\text{RED}} = \frac{2RT}{z}\int_0^{\Delta n} \ln\frac{c_c}{c_d}\mathrm{d}n = \frac{2RT}{z}\left[\Delta n \ln\frac{V_{d,i}(n_{c,i}-\Delta n)}{V_{c,i}(n_{d,i}+\Delta n)} - n_{c,i}\ln\left(1-\frac{\Delta n}{n_{c,i}}\right) - n_{d,i}\ln\left(1+\frac{\Delta n}{n_{d,i}}\right)\right] \quad (5)$$

where Δn is the total number of salt ions transferred between the two solutions, and the factor of 2 denotes the transport of both sodium and chloride ions. As with PRO, the work produced by mixing is represented here as a positive value. Feed volumes and concentrations before and after mixing, for RED, are listed in Table 2.

It is important to note that in RED energy is extracted through an external circuit, which, while completely analogous to a hydraulic network in the dynamic sense, does not have the same thermodynamic effect, i.e., an ideal resistor passing a diffusion-induced current does not alter the equilibrium properties of the system. One may draw a constant current out of an RED cell, to the point where concentrations equilibrate. The applied load resistance will reduce the rate of charge transport, but this current will only cease when the concentrations have equilibrated.[18,22] Thus, unlike PRO, there is no configurational constraint analogous to a constant applied pressure that inherently limits the extent of mixing. Inevitable losses such as the electrical resistance of the membranes and the feed compartments will ultimately limit the amount of recoverable work. However, since there is potential to reduce these process inefficiencies through future design improvements, for the purposes of the present study (as with PRO) we ignore these internal system losses, and here we apply only $W_{\text{rev}}^{\text{PRO}}$ in order to calculate the potential energy savings from RED.

2.3. RO Process Equations. The RO process recovery can be determined from the RO feed and brine concentrations in addition to the concentrated feed concentrations from OER_1 and OER_2 as

$$Y = \frac{V_p}{V_f} = 1 - \frac{c_f}{c_b} = 1 - \frac{c_{c,f,\text{OER1}}}{c_{c,i,\text{OER2}}} \quad (6)$$

where V_p is RO permeate volume, V_f is RO feed volume, c_f is RO feed concentration and c_b is RO brine concentration. In the coupled scenario, the RO feed concentration is the OER_1 concentrated feed effluent ($c_{c,f,\text{OER1}}$, now diluted from the OER process) and the RO brine concentration is the OER_2 concentrated feed influent ($c_{c,i,\text{OER2}}$). The specific energy consumption of the RO process can be represented as[23]

$$\text{SEC}_{\text{RO}} = \Delta P_{\text{RO}} = \frac{\pi_{\text{RO}}}{1-Y} \quad (7)$$

where ΔP_{RO} is the RO pump pressure and $\Delta\pi_{\text{RO}}$ is the inlet osmotic pressure difference between the RO feed and permeate. The above, which applies when a HER device conversion efficiency of unity has been assumed, equates to the RO process thermodynamic restriction. The thermodynamic restriction corresponds to the RO pump applied pressure necessary for ensuring permeation along the entire length of the RO module, accounting for the increased osmotic pressure of the concentrated brine at the outlet.

The net SEC of the coupled process is obtained by subtracting the energy generated in the pre- and post-RO OER stages from the SEC of the HER-assisted RO process, viz.

$$\text{SEC}_{\text{net}} = \text{SEC}_{\text{RO}} - \frac{W_{\text{OER1}}}{V_p} - \frac{W_{\text{OER2}}}{V_p} \quad (8)$$

where the subscripts 1 and 2, refer to the first and second stage OER, respectively. Calculations for the coupled process have been carried out considering two possible RO configurations: (1) constant pressure applied at 770 psi (53 bar, corresponding with the thermodynamic restriction[23] for a 550 mol/m^3 feed at 50% recovery) and RO brine target concentration of 1100 mol/m^3, which effectively varies the RO process recovery depending on the degree of mixing in OER_1, and (2) constant recovery (Y = 0.5) with variable RO pump applied pressure. Most modern RO facilities operate at Y = 0.5 and we have therefore sought to align our modeling results with actual practice. Note that other nonideal process losses (hydraulic, mass transfer, dilute channel resistance, etc.) are not included in this analysis. The dilution ratio, ϕ (i.e., the ratio of the OER concentrated feed volume to the dilute feed volume), is taken as unity in the current study, and complete mixing (to thermodynamic equilibrium) is always assumed for the OER_2 process.

3. RESULTS AND DISCUSSION

3.1. Available Work. We begin by examining the work that can be extracted by the PRO and RED processes alone. Figure 2 shows the maximum reversible work (W_{rev}) from each process plotted against the changing dilute feed (e.g., fresh water or tertiary wastewater) and concentrated feed (e.g., seawater RO feed or brine) concentrations. All mixing begins from the same starting feed concentrations and approaches equilibrium, except where practical constraints may limit the extent of mixing achieved. Although both processes approach the same equilibrium, the concentration profiles follow different paths, a consequence of the different relative amounts of water and salt molecules transferred in the RED and PRO processes, as they approach reversible equilibrium. In practice this means that if the dilute or concentrated feed is to be used in another process after mixing, there may be a preferred recovery technology based on the concentration of the feed at a given extent of mixing.

Figure 3 illustrates the available work produced by PRO and RED relative to the RO feed concentration (diluted effluent from OER_1 concentrated feed). Here the OER concentrated feed extent of mixing corresponds to $r_{\text{mix,c}} = 1 - [(c_{c,f} - c_{eq})/(c_{c,i} - c_{eq})]$, where c_{eq} is the concentration associated with reversible equilibrium. As expected, when a constant applied pressure is applied for PRO, the recoverable work decreases. While the maximum power density under a constant applied pressure for PRO is indeed achieved at $\Delta P = \Delta\pi_i/2$, it is clear

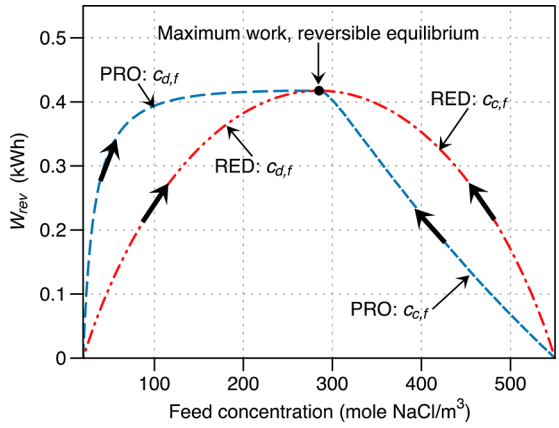

Figure 2. The change in reversible work produced by the system (W_{rev}) versus the concentration of the feed using eq 3 for PRO and eq 5 for RED. For a given amount of reversible work, the concentrations of the concentrated and dilute feeds are shown for both PRO and RED. All feeds have the same concentration at the point of maximum reversible work (thermodynamic equilibrium). Arrows on plot lines indicate direction of increased extent of mixing. Here V_c = 1 m^3, V_d = 1 m^3, concentrated feed initial concentration = 550 mol NaCl/m^3, dilute feed initial concentration = 20 mol NaCl/m^3, T = 293.15 K.

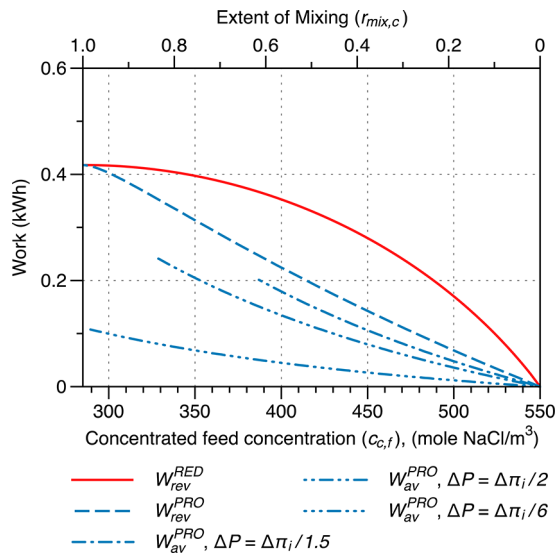

Figure 3. The change in work produced by the system versus the concentration of the OER concentrated feed for different extents of mixing, for both PRO and RED. Equations 3 and 4 were utilized for PRO, whereas eq 5 was applied for RED. Here V_c = 1 m^3, V_d = 1 m^3, concentrated feed initial concentration = 550 mol NaCl/m^3, dilute feed initial concentration =20 mol NaCl/m^3, T = 293.15 K.

from the data that more energy can be recovered at lower extents of mixing, for example, when $\Delta P = \Delta\pi_i/1.5$. The implications of this are important, as less membrane area may be required to operate at lower extents of mixing, which correlates with reduced capital and operation costs. As already noted, the different values of constant applied pressure shift the equilibrium concentrations of the system. The equilibrium concentration, in turn, corresponds with the maximum extractable energy for a given applied pressure. This configurational loss is not shared by RED, where the cell potential is independent of the applied load[4,14,22]

Comparing the results for maximum reversible work, the RED process is capable of achieving greater gross power output at a higher concentrated feed concentration than PRO. Although this behavior does not reveal the technical feasibility of achieving a degree of mixing with either process, it does provide insight into the maximum potential of each process at a given concentration. The RED data also shows that the recoverable work begins to level off as it approaches its maximum value and this occurs at lower extent of mixing than for PRO. Therefore, if a practical RED process operates at low efficiency, achieving a higher degree of mixing may not be economically justified.

3.2. Net SEC for Two-Stage OER. It has been shown, by Yip and Elimelech,[21] that for ϕ = 1 the recoverable work is maximized at a constant applied pressure of $\Delta P = \Delta\pi_i/2$, Therefore, this pressure was chosen for all the calculations of PRO-facilitated OER using W_{av}^{PRO}. For the *constant pressure* scenario (Figure 4) using either PRO- or RED-based OER,

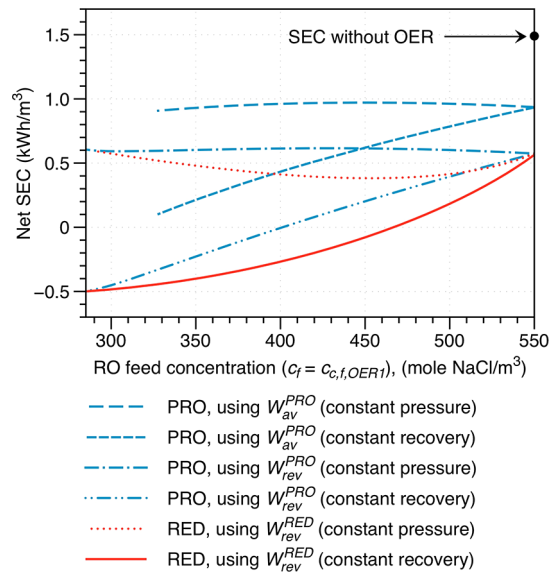

Figure 4. Net SEC versus RO feed concentration for PRO and RED facilitated OER, with either constant pressure (770 psi) or constant recovery (Y = 0.5) RO operation. $\Delta P = \Delta\pi_i/2$ was used for the available work from PRO-based OER, ϕ = 1, concentrated feed initial concentration = 550 mol NaCl/m^3, dilute feed initial concentration =20 mol NaCl/m^3, T = 293.15 K. Equations 3, 4 and 5 were used to calculate the recoverable energy from PRO and RED, whereas eqs 6, 7, and 8 were used for the RO process thermodynamics.

increased extent of mixing in OER$_1$ (i.e., reducing RO feed salinity) has limited impact on SEC, but proportionally increases RO product water recovery. While there is some osmotic energy recovered, the recoverable energy from the HER decreases in proportion to the decreased RO brine volume (due to higher RO recovery). Furthermore, the recoverable energy from OER$_2$ is also reduced (due to lower brine volume). In contrast, for the *constant recovery* scenario (also Figure 4), the net SEC decreases (net energy recovered increases) with increased OER$_1$ extent of mixing for both PRO and RED based OER. At constant recovery, lower salinity RO feeds consume less energy due to reduced feed pressure requirements, whereas the higher RO brine flow rate enables greater energy recovery by the OER$_2$ process.

In all scenarios, without considering nonideal process losses (hydraulic, mass transfer, dilute channel resistance, etc.), RED appears to recover more osmotic energy than PRO over most

RO feed concentrations, although the reversible work cases for RED and PRO achieve the same energy savings at complete mixing. However, it is important to consider that energy recovery potential is but one metric by which to compare these processes. Ultimately, the ability to extract more of the available potential may be offset by efficiency considerations. For example, capital expenditure is expected to also scale with required membrane area, most commonly associated with power density. Based upon this metric, PRO has been shown to outperform RED by an order of magnitude.[13] Therefore, it is not possible to gauge the actual preferred technology based on the current results, and they are primarily useful in defining the potential impact on the overall energy consumption for water production.

Figure 5 depicts the change in SEC_{net} for constant recovery scenarios (Y = 0.5) for both PRO and RED-based OER considering the following options: OER_1 only, OER_1 and OER_2, OER_2 with RO feedwater dilution, and dilution only. Note that OER_1 process reduces the salinity of RO feedwater, but at the capital and operating cost of the OER equipment rather than at the much lower cost of simply blending a lower salinity stream into the RO feedwater (i.e., "dilution"). Of course the benefit of OER technology is the added water quality barrier to pollutant crossover from the dilute stream. It should be emphasized that as the RO process recovery decreases, the contribution of the OER_1 stage increases. Therefore, to generate the lowest net SEC, flow through the OER devices should be maximized relative to permeate volume, up to a point where the OER_1 infrastructure becomes oversized and dominates the capital cost of the entire desalination plant.

The combined OER_1 and OER_2 configuration recovered the most energy. It is clear from the results that the energy recovered by OER_1 increases with extent of mixing (i.e., declining RO feed concentration) while the energy produced from OER_2 decreases due to a corresponding drop in RO brine concentration. Our results correspond well with the results of the coupled RO-RED study which was recently published.[18] The negative SEC_{net} values output by the model correspond to net energy production from the coupled process. Positive work can be produced from the coupled process due to the mixing of greater volume in the OER_1 process than the volume from which permeate is being extracted in the RO process. That is, we are mixing more volume with PRO or RED than the volume we are "demixing" through RO (including the recovery of volume used to dilute the RO feed stream), resulting in net energy production. The results here show slightly greater potential energy savings than those shown by Li et al.[18] due to the idealized analysis conducted here (i.e., no stack or load resistance).

3.3. Economic Implications. The energy recoverable by OER could dramatically lower the energy demand and operating cost of seawater RO plants; such energy savings could reduce one of the most significant environmental impacts of seawater desalination. Practical barriers to overcome in developing OER technology include capital, operation, and maintenance costs. Cumulatively, these costs should be less than the reduced costs of RO electricity consumption for OER technology to proliferate like HER technology; in other words, the total cost of water is reduced. Until an actual OER system is built and tested it is difficult to predict the operating costs, so here we will consider projections of potential OER capital costs. Using published data for the amortized cost of electricity over the 20-year life of a 100 000 gallon per day (~380 m^3/day) RO facility,[24] it is possible to estimate the capital cost available to accommodate OER infrastructure. As set out in the Desalination Markets 2010 report,[24] the cost of electricity was taken as $0.06 per kWh and the interest rate was set at 6% annually. Our results suggest that energy savings provided by RED-facilitated OER could offset 42% of the total RO plant capital cost, when discounting the capital cost of the OER plant

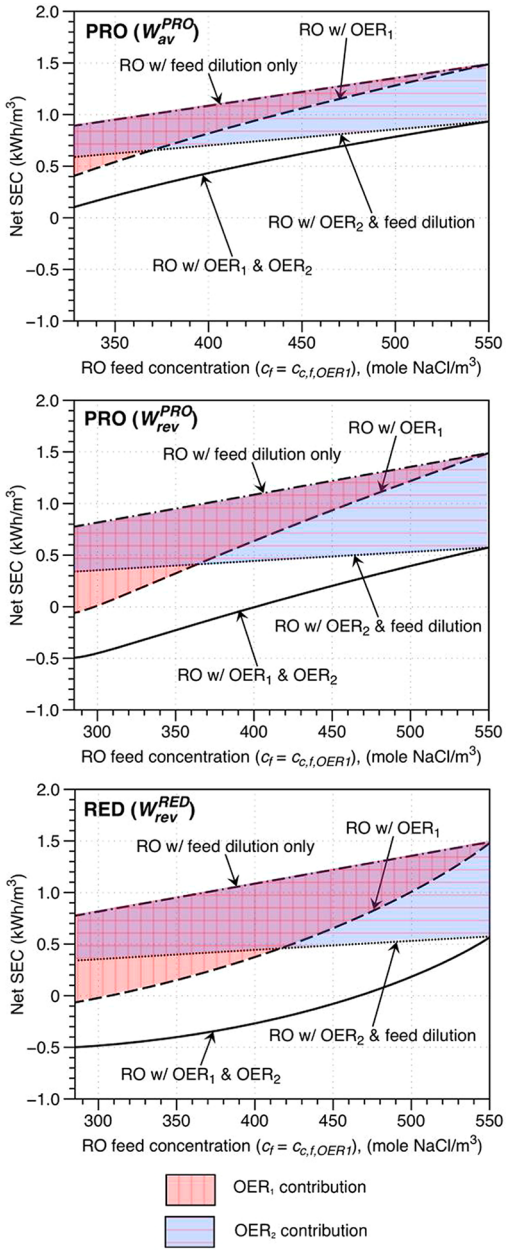

Figure 5. Net SEC versus RO feed concentration for a coupled process with (1) PRO, using the available work (top), (2) PRO, using the full reversible work (middle), and (3) RED, using the full reversible work (bottom). The figure illustrates the contribution of dilution and individual OER stages, with the hatching indicating the contribution of Stage 1 or Stage 2 OER processes in lowering the net SEC. Note that it is intrinsic for the OER_1 process that dilution occurs and a lower salinity feed is passed to the RO process. Y = 0.5, ϕ = 1, $\Delta P = \Delta\pi_i/2$ for PRO-based OER, concentrated feed initial concentration = 550 mol NaCl/m^3, dilute feed initial concentration = 20 mol NaCl/m^3, T = 293 K. Equationse 3, 4 and 5 were used to calculate the recoverable energy from PRO and RED, whereas eqs 6, 7, and 8 were used for the RO process thermodynamics.

itself (ϕ = 1, c_c = 550 mol/m^3, c_d = 20 mol/m^3, Y = 0.5). Although the energy savings are significant, it must be acknowledged that hydraulic and other process losses are likely to decrease the work produced by the OER plant relative to the reversible work. As the degree of mixing is increased net SEC decreases, but the additional capital cost increases due to the increase in required OER membrane area.

A review of PRO research suggests the capital cost per unit area of membrane eclipses the economic value of the theoretical maximum power produced per square meter over a membrane lifetime of 5 years.[25] It is reasonable to assume that the construction of a membrane-based OER facility (i.e., PRO/RED) designed for, say, a 100 000 m^3 per day RO facility, would have similar requirements of membrane area. High performance RO membranes are priced at approximately 20 \$USD/m^2 and modern ion exchange membranes can cost upward of 200 \$USD/m^2.[26] These costs are not trivial, with membrane capital costs accounting for approximately 6% of the total capital cost of an RO facility and membrane replacement contributing to 7% of operational expenditures.[24] Pumps, pressure vessels, and hydraulic energy recovery capital costs account for only 11% of total RO facility capital costs, and are likely to cost less for the individual OER processes due to operation at lower pressure.

Through the calculation of the recoverable energy from mixing concentrated and dilute waters, it has been possible to provide a rough indication of the available capital for the OER components of a coupled process. Fouling, hydraulic losses, process inefficiencies and other mitigating factors are likely to result in much lower energy savings than the ideal case. At current pricing, OER coupled with RO and HER will be a practical option if OER capital and maintenance costs do not exceed the economic value of energy savings.

AUTHOR INFORMATION

Corresponding Author

*Phone: +1 310 206 3735; fax: +1 310 206 2222; e-mail: emvhoek@ucla.edu.

Present Address

†Department of Mechanical and Aerospace Engineering, Princeton University, Princeton, New Jersey 08544, United States

Notes

The authors declare no competing financial interest.

ACKNOWLEDGMENTS

We are grateful for financial support for this research provided by tbe Clean Energy for Green Industry (CGI) NSF IGERT at UCLA. G.Z.R is supported by a Marie-Curie IOF grant under the FP7 program of the European Research Council.

NOMENCLATURE

c	concentration (mol/m^3)
c_{eq}	equilibrium concentration (mol/m^3)
c_b	RO brine concentration (mol/m^3)
c_f	RO feed concentration (mol/m^3)
CF	concentration factor
E	half-cell potential (V)
ΔE	electromotive force (V)
F	Faraday constant (C/mol)
ΔG	free energy of mixing (kWh)
i	van't Hoff factor
n	moles of salt ions (mol)
Δn	moles of salt ions transferred (mol)
ΔP	PRO applied booster pump pressure (Pa)
ΔP_{RO}	RO applied pump pressure (Pa)
R	universal gas constant (J/(mol K))
$r_{mix,\,c}$	concentrated feed extent of mixing
SEC_{net}	net specific energy consumption (kWh/m^3)
SEC_{RO}	RO process specific energy consumption (kWh/m^3)
T	temperature (K)
V	volume (m^3)
$\bar{V}$	molar volume of water
V_f	RO feed Volume (m^3)
V_p	RO permeate Volume (m^3)
ΔV	transferred volume (m^3)
W_{rev}^{PRO}	PRO reversible work (kWh/mixed volume)
W_{rev}^{RED}	RED reversible work (kWh/mixed volume)
W_{av}^{PRO}	PRO available work (kWh/mixed volume)
$W_{OER\,1}$	OER Stage 1 work (kWh)
$W_{OER\,2}$	OER Stage 2 work (kWh)
Y	RO process recovery
z	valence of salt ions

Greek Symbols

π	osmotic pressure (Pa)
$\Delta\pi$	osmotic pressure difference (Pa)
ϕ	dilution ratio

Subscripts

f	final
i	initial
c	concentrated
d	dilute

REFERENCES

(1) Peñate, B.; García-Rodríguez, L. Energy optimization of existing SWRO (seawater reverse osmosis) plants with ERT (energy recovery turbines): Technical and thermoeconomic assessment. *Energy* **2011**, *36*, 613−626.

(2) Li, M. H. Minimization of energy in reverse osmosis water desalination using constrained nonlinear optimization. *Ind. Eng. Chem. Res.* **2010**, *49*, 1822−1831.

(3) Dlugolecki, P.; Gambier, A.; Nijmeijer, K.; Wessling, M. Practical potential of reverse electrodialysis as process for sustainable energy generation. *Environ. Sci. Technol.* **2009**, *43*, 6888−6894.

(4) Post, J. W.; Hamelers, H. V. M; Buisman, C. J. N. Energy recovery from controlled mixing salt and fresh water with a reverse electrodialysis system. *Environ. Sci. Technol.* **2008**, *42*, 5785−5790.

(5) Veerman, J.; Saakes, M.; Metz, S. J.; Harmsen, G. J. Electrical power from sea and river water by reverse electrodialysis: A first step from the laboratory to a real power plant. *Environ. Sci. Technol.* **2010**, *44*, 9207−9212.

(6) Achilli, A.; Cath, T. Y.; Childress, A. E. Power generation with pressure retarded osmosis: An experimental and theoretical investigation. *J. Membr. Sci.* **2009**, *343*, 42−52.

(7) Yip, N. Y.; Elimelech, M. Performance limiting effects in power generation from salinity gradients by pressure retarded osmosis. *Environ. Sci. Technol.* **2011**, *45*, 10273−10282.

(8) Brogioli, D.; Zhao, R.; Biesheuvel, P. M. A prototype cell for extracting energy from a water salinity difference by means of double layer expansion in nanoporous carbon electrodes. *Energy Environ. Sci.* **2011**, *4*, 772−777.

(9) Brogioli, D. Extracting renewable energy from a salinity difference using a capacitor. *Phys. Rev. Lett.* **2009**, *103*, 058501.

(10) Kim, D. K.; Duan, C. H.; Chen, Y. F.; Majumdar, A. Power generation from concentration gradient by reverse electrodialysis in ion-selective nanochannels. *Microfluid. Nanofluid.* **2010**, *9*, 1215−1224.

(11) Cao, X.; Huang, X.; Liang, P.; Xiao, K.; Zhou, Y.; Zhang, X.; Logan, B. E. A new method for water desalination using microbial desalination cells. *Environ. Sci. Technol.* **2009**, *43*, 7148−7152.
(12) Mehanna, M.; Saito, T.; Yan, J.; Hickner, M.; Cao, X.; Huang, X.; Logan, B. E. Using microbial desalination cells to reduce water salinity prior to reverse osmosis. *Energy Environ. Sci.* **2010**, *3*, 1114−1120.
(13) Ramon, G. Z.; Feinberg, B. J.; Hoek, E. M. V. Membrane-based production of salinity-gradient power. *Energy Environ. Sci.* **2011**, *4*, 4423−4434.
(14) Post, J. W.; Veerman, J.; Hamelers, H. V. M; Euverink, G. J. W.; Metz, S. J.; Nymeijer, K.; Buisman, C. J. N. Salinity-gradient power: Evaluation of pressure-retarded osmosis and reverse electrodialysis. *J. Membr. Sci.* **2007**, *288*, 218−230.
(15) Brauns, E., Combination of a desalination plant and a salinity gradient power reverse electrodialysis plant and use thereof. US 2008/0230376 A1, Jul 19, 2006
(16) Hancock, N. T.; Black, N. D.; Cath, T. Y. A comparative life cycle assessment of hybrid osmotic dilution desalination and established seawater desalination and wastewater reclamation processes. *Water Res.* **2012**, *46*, 1145−1154.
(17) Hoover, L. A.; Phillip, W. A.; Tiraferri, A.; Yip, N. Y.; Elimelech, M. Forward with osmosis: Emerging applications for greater sustainability. *Environ. Sci. Technol.* **2011**, *45*, 9824−9830.
(18) Li, W.; Krantz, W. B.; Cornelissen, E. R.; Post, J. W.; Verliefde, A. R. D.; Tang, C. Y. A novel hybrid process of reverse electrodialysis and reverse osmosis for low energy seawater desalination and brine management. *Appl. Energy* **2013**, *104*, 592−602.
(19) Xu, P.; Drewes, J. E.; Bellona, C.; Amy, G.; Kim, T.-U.; Adam, M.; heberer, t. rejection of emerging organic micropollutants in nanofiltration-reverse osmosis membrane applications. *Water Environ. Res.* **2005**, *77*, 40−48.
(20) Tongwen, X. Ion exchange membranes: State of their development and perspective. *J. Membr. Sci.* **2005**, *263*, 1−29.
(21) Yip, N. Y.; Elimelech, M. Thermodynamic and energy efficiency analysis of power generation from natural salinity gradients by pressure retarded osmosis. *Environ. Sci. Technol.* **2012**, *46*, 5230−5239.
(22) Veerman, J.; Saakes, M.; Metz, S.; Harmsen, G. Reverse electrodialysis: A validated process model for design and optimization. *Chem. Eng. J.* **2011**, *166*, 256−268.
(23) Zhu, A.; Christofides, P. D.; Cohen, Y. Effect of thermodynamic restriction on energy cost optimization of RO membrane water desalination. *Ind. Eng. Chem. Res.* **2009**, *48*, 6010−6021.
(24) (GWI), G. W. I.: Desalination Markets 2010, 2010.
(25) Achilli, A.; Childress, A. E. Pressure retarded osmosis: From the vision of Sidney Loeb to the first prototype installation—Review. *Desalination* **2010**, *261*, 205−211.
(26) FilmTec Price List. Vol. 2011.

■ NOTE ADDED AFTER ASAP PUBLICATION

Several small typos in the text and an error in eq 5 were discovered in the version published ASAP on March 4, 2013. The corrected version published ASAP on March 6, 2013.